Operating Instructions

for

Differential Pressure

Flow Meter / Monitor

Model: RCD-...

1. Contents

Manufactured and sold by:

Kobold Messring GmbH
Nordring 22-24
D-65719 Hofheim
Tel.: +49(0)6192-2990
Fax: +49(0)6192-23398
E-Mail: info.de@kobold.com
Internet: www.kobold.com

2. Note

Please read these operating instructions before unpacking and putting the unit into operation. Follow the instructions precisely as described herein.
The instruction manuals on our website www.kobold.com are always for currently manufactured version of our products. Due to technical changes, the instruction manuals available online may not always correspond to the product version you have purchased. If you need an instruction manual that corresponds to the purchased product version, you can request it from us free of charge by email (info.de@kobold.com) in PDF format, specifying the relevant invoice number and serial number. If you wish, the operating instructions can also be sent to you by post in paper form against an applicable postage fee.

The devices are only to be used, maintained and serviced by persons familiar with these operating instructions and in accordance with local regulations applying to Health & Safety and prevention of accidents.

When used in machines, the measuring unit should be used only when the machines fulfil the EC-machine guidelines.

as per PED 2014/68/EU
In acc. with Article 4 Paragraph (3), "Sound Engineering Practice", of the PED 2014/68/EU no CE mark.

	Pipe	
	Diagram 7 group 1 no dangerous fluids	Diagram 6 group 2 dangerous fluids
RCD-..05 - RCD..30	Art. 4, § 3	Art. 4, § 3
RCD-1135, RCD-1140	Art. 4, § 3	Cat. I
RCD-1235, RCD-1240	Cat. I	Cat. II
RCD-1145, RCD-1150	Art. 4, § 3	Cat. I
RCD-1245, RCD-1250	Cat. I	Cat. II
RCD-1155, RCD-1160, RCD-1165	Cat. I	not deliverable
RCD-1260, RCD-1265	Cat. I	Cat. II

3. Instrument Inspection

Instruments are inspected before shipping and sent out in perfect condition. Should damage to a device be visible, we recommend a thorough inspection of the delivery packaging. In case of damage, please inform your parcel service / forwarding agent immediately, since they are responsible for damages during transit.

Scope of delivery:
The standard delivery includes:

- Differential Pressure Flow Meter / Monitor model: RCD

4. Regulation Use

Any use of the Differential Pressure Flow Meter / Monitor, model: RCD, which exceeds the manufacturer's specification may invalidate its warranty. Therefore, any resulting damage is not the responsibility of the manufacturer. The user assumes all risk for such usage.

5. Operating Principle

The Kobold Flow Meter is used for measuring and monitoring the flow velocity of liquids and gases. The device works in accordance with the well-known principle of the Venturi nozzle. A small pressure difference proportional to the flow is produced by the flowing medium at a cross-sectional constriction (nozzle) in the device housing. The shape of the nozzle is based on the particular flow value whereby flow characteristic remains constant over the entire measuring range. Pressure sensing ports are located in the flow body to measure the resulting differential pressure and send it to a differential-pressure measuring cell fitted in the display case. If the flow is exceeded, the differential-pressure measuring cell is protected by mechanical stops. In the case of mechanical displays the flow rate measured by the differential pressure measuring cell is indicated on a pointer element which is calibrated in l/min water or Nm3/h air. On electronic displays the mechanical motion is converted to an electrical signal by a Hall sensor. The electronics serves to display and monitor the volumetric flow.

6. Mechanical Connection

6.1. Check Service Conditions

- Flow
- Max. operating pressures
- Max. operating temperature
- Medium
- Mounting position

When the medium is not in our substance database:
- operating density
- operating viscosity

6.2. Installation

- Flow in direction of arrow (universal)
- Avoid pressure and tensile loads
  mount inlet and outlet piping at distances of 50 mm from the connections
- Check connections for leaks
- Pay attention to the inlet and outlet path (see drawings below)

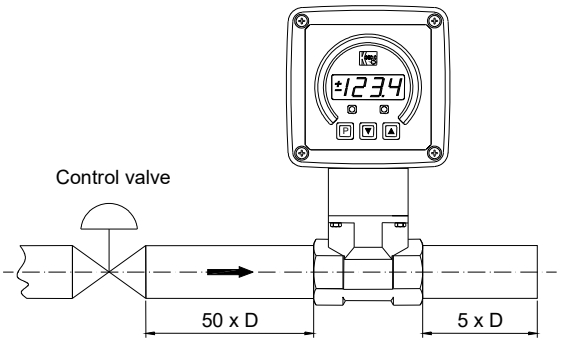

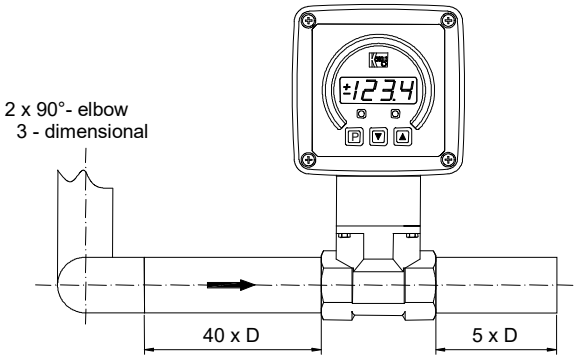

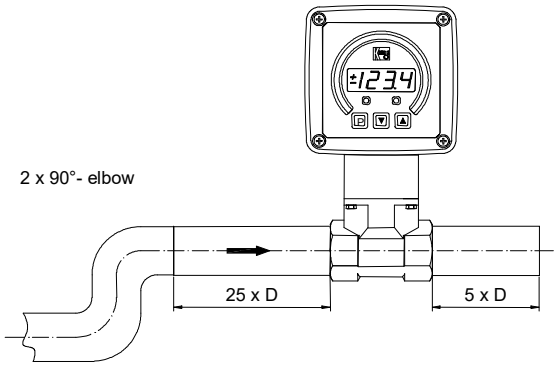

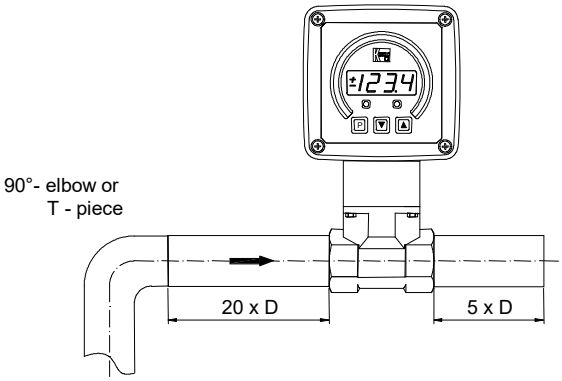

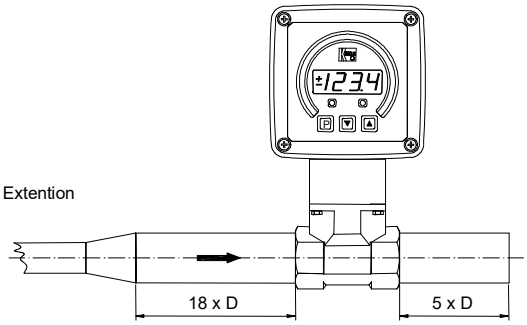

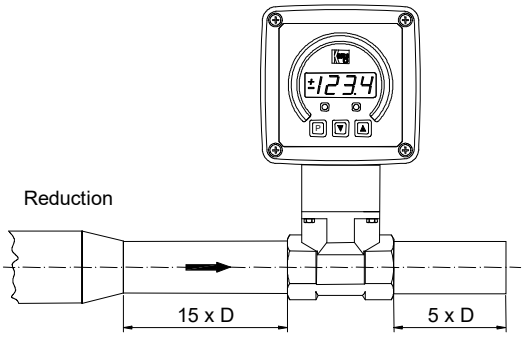

7. Electrical Connection

7.1. Mechanical Pointer Indication (..Z...)

without electrical connection

7.2. Compact Electronics: (..C30R, ..C30M, ..C34P, ..C34N)

see
Operating instructions supplement
for compact electronics with frequency output

7.3. ADI Electronic

see
Operating instructions supplement
for ADI electronic display

8. Commissioning

8.1. Mechanical Pointer Indication (..Z...)

Attention! Remove transportation safety screw and screw in the sealing screw from the bag into the thread M3.

8.2. Setting Compact Electronics

see
Operating instructions supplement
for compact electronics with frequency output

8.3. Setting ADI Electronic

see
Operating instructions supplement
for ADI electronic display

9. Maintenance

The measuring instrument requires no maintenance when the measured medium leaves no deposits. To prevent fouling the flow meter pressure sensing ports, we recommend that a filter is installed, for example the magnetic filter, model MFR. Work on the sensor and electronics should only be carried out by the supplier, otherwise the warranty is void.

10. Technical Information

10.1. Sensor Data

Measuring range:	see name plate
Measuring accuracy:	3 % of F.S.
Reproducibility:	1 % of F.S.
Process temperature:	RCD... mechanical: -20 °C…+100 °C RCD... electronic: -20 °C…+80 °C
Ambient temperature:	max. 80 °C
Max. operating pressure:	25 bar (RCD-11 connection: G3, 3” NPT)) 40 bar (all others)
Pressure loss:	approx. 300 mbar
Minimum pressure:	0.6 bar
Protection:	IP 65

Materials:

Display case:	cast aluminum
Front cover:	polycarbonate
Flow housing:	RCD-x1..: aluminum bronze RCD-x2..: stainless steel 1.4581
Differential pressure housing:	RCD-x1..: aluminum bronze RCD-x2..: stainless steel 1.4571
Pressure measuring cell:	stainless steel 1.4571
Venturi nozzle:	stainless steel 1.4571
Gaskets:	RCD-x1..: NBR RCD-x2..: FPM

10.2. Displays/Electronics

Mechanical pointer indicator:

Display:	270 °
Option:	special scales for other gases and liquids. Please specify medium, density, viscosity, operating pressure and temperature

Compact electronics:

Display:	3-digit LED
Analogue output:	(0) 4 – 20 mA adjustable, max. 500 Ω
Switching outputs:	1 (2) semiconductor PNP or NPN, factory set
Contact operation:	N/C / N/O frequency programmable
Setting:	via 2 buttons
Supply:	24 V_{DC} ± 20 %, 3-wire, find . 100 mA
Electrical connection:	plug connector M12 x 1

ADI electronics

Display:	bar graph and 5-digit digital display
Analogue output:	(0)4-20 mA, 0-10 V_{DC}
Two switching outputs:	relay/changeover contacts max. 250 V_{AC}/5 A resistive load, max. 30 V_{DC} / 5 A
Setting:	via 4 buttons
Power supply:	100…240 V_{AC}±10% or 18…30 V_{AC}/10…40 V_{DC}
Electrical connection:	pluggable terminal block via cable gland

11. Order Details

Order details (example: **RCD 1195H G4 K 0 0 0**)

Meas. Range water [L/min]	Orifice ∅ [mm]	Model		Connection	
		Material brass casting	Material st. steel	G-thread	NPT
0.5…3.3	2.80	**RCD 1195H**	**RCD 1295H**	**G4** = G ½	**N4** = ½ NPT
0.5…4.2	3.15	**RCD 1100H**	**RCD 1200H**		
0.5…5.2	3.50	**RCD 1190H**	**RCD 1290H**		
1.0…6.8	4.00	**RCD 1191H**	**RCD 1291H**		
1.0…8.6	4.50	**RCD 1101H**	**RCD 1201H**		
1.0…10.6	5.00	**RCD 1192H**	**RCD 1292H**		
2.0…13.2	5.60	**RCD 1102H**	**RCD 1202H**	**G4** = G ½ **G5** = G ¾	**N4** = ½ NPT **N5** = ¾ NPT
2.0…16.8	6.30	**RCD 1103H**	**RCD 1203H**		
2.0…21.4	7.10	**RCD 1104H**	**RCD 1204H**		
3.0…27.0	8.00	**RCD 1106H**	**RCD 1206H**	**G4** = G ½ **G5** = G ¾ **G6** = G 1	**N4** = ½ NPT **N5** = ¾ NPT **N6** = 1 NPT
5.0…34.5	9.00	**RCD 1109H**	**RCD 1209H**		
5.0…42.4	10.00	**RCD 1110H**	**RCD 1210H**		
10.0…58.0	11.20	**RCD 1114H**	**RCD 1214H**	**G5** = G ¾ **G6** = G 1	**N5** = ¾ NPT **N6** = 1 NPT
10.0…66.0	12.50	**RCD 1115H**	**RCD 1215H**		
10.0…85.0	14.00	**RCD 1116H**	**RCD 1216H**		
20.0…118	16.00	**RCD 1117H**	**RCD 1217H**	**G6** = G 1 **G8** = G 1 ½	**N6** = 1 NPT **N8** = 1 ½ NPT
20.0…132	17.50	**RCD 1125H**	**RCD 1225H**		
20.0…148	18.00	**RCD 1126H**	**RCD 1226H**		
20.0…168	19.20	**RCD 1130H**	**RCD 1230H**	**G8** = G 1 ½ **G9** = G 2	**N8** = 1 ½ NPT **N9** = 2 NPT
30.0…275	26.00	**RCD 1135H**	**RCD 1235H**		
50.0…350	28.00	**RCD 1137H**	**RCD 1237H**		
50.0…435	31.00	**RCD 1139H**	**RCD 1239H**		
100…700	40.00	**RCD 1145H**	**RCD 1245H**	**G9** = G 2 **GB** = G 3	**N9** = 2 NPT **NB** = 3 NPT
100…910	43.50	**RCD 1150H**	**RCD 1250H**		
100…1060	51.00	**RCD 1155H**	**RCD 1255H**	**GB** = G 3	**NB** = 3 NPT
200…1540	60.00	**RCD 1160H**	**RCD 1260H**		
300…2350	67.00	**RCD 1165H**	**RCD 1265H**		

Evaluating electronics

Mechanical pointer indication

Indication	Flow direction	Location find.
Z = pointer indicat., 270 °	**L** = from left **R** = from right **B** = from bottom	**L** = left **R** = right **T** = top **B** = bottom

ADI-electronics**

Indication	Supply	Output	Contacts
K = bargraph /digital	**0** = 100-240 $V_{AC/DC}$ **3** = 18-30 V_{AC} 10-40 V_{AC}	**0** = without **4** = (0)4-20 mA, 0-10 V	**2** = 2 changeover contacts

Compact electronics**

Indication	Supply	Output/contacts
C = digital	**3** = 24 V_{DC}	**0R** = 2 x Open Collector, PNP **0M** = 2 x Open Collector, NPN **4P** = 4-20 mA, 1 x Open Coll. PNP **4N** = 4-20 mA; 1 x Open Coll. NPN

** Please specify flow direction in the order (expect from top to bottom)
Please specify the operating conditions in the order

Order details (example: **RCD 1195L G4 K 0 0 0**)

Range air 1 bar abs. / 20 °C [m³N/h]*	Orifice ∅ [mm]	Model Material Alu bronze	Model Material st. steel	Connection G-thread	Connection NPT
0.50…5.35	2.80	**RCD 1195L**	**RCD 1295L**	**G4** = G ½	**N4** = ½ NPT
1.00…6.70	3.15	**RCD 1100L**	**RCD 1200L**		
1.00…8.30	3.50	**RCD 1190L**	**RCD 1290L**		
1.00…10.9	4.00	**RCD 1191L**	**RCD 1291L**		
2.00…13.8	4.50	**RCD 1101L**	**RCD 1201L**		
2.00…17.0	5.00	**RCD 1192L**	**RCD 1292L**		
2.00…21.4	5.60	**RCD 1102L**	**RCD 1202L**	**G4** = G ½ **G5** = G ¾	**N4** = ½ NPT **N5** = ¾ NPT
3.00…27.0	6.30	**RCD 1103L**	**RCD 1203L**		
5.00…34.5	7.10	**RCD 1104L**	**RCD 1204L**		
5.00…43.5	8.00	**RCD 1106L**	**RCD 1206L**	**G4** = G ½ **G5** = G ¾ **G6** = G 1	**N4** = ½ NPT **N5** = ¾ NPT **N6** = 1 NPT
10.0…55.0	9.00	**RCD 1109L**	**RCD 1209L**		
10.0…68.0	10.00	**RCD 1110L**	**RCD 1210L**		
10.0…78.0	11.20	**RCD 1114L**	**RCD 1214L**	**G5** = G ¾ **G6** = G 1	**N5** = ¾ NPT **N6** = 1 NPT
10.0…97.0	12.50	**RCD 1115L**	**RCD 1215L**		
20.0…116	14.00	**RCD 1116L**	**RCD 1216L**		
20.0…158	16.00	**RCD 1117L**	**RCD 1217L**	**G6** = G 1 **G8** = G 1 ½	**N6** = 1 NPT **N8** = 1 ½ NPT
20,0…188	17.50	**RCD 1125L**	**RCD 1225L**		
20.0…198	18.00	**RCD 1126L**	**RCD 1226L**		
30.0…225	19.20	**RCD 1130L**	**RCD 1230L**	**G8** = G 1 ½ **G9** = G 2	**N8** = 1 ½ NPT **N9** = 2 NPT
50.0…375	26.00	**RCD 1135L**	**RCD 1235L**		
50.0…515	28.00	**RCD 1137L**	**RCD 1237L**		
100…630	31.00	**RCD 1139L**	**RCD 1239L**		
100…910	40.00	**RCD 1145L**	**RCD 1245L**	**G9** = G 2 **GB** = G 3	**N9** = 2 NPT **NB** = 3 NPT
200…1160	43.50	**RCD 1150L**	**RCD 1250L**		
200…1360	51.00	**RCD 1155L**	**RCD 1255L**	**GB** = G 3	**NB** = 3 NPT
400…2000	60.00	**RCD 1160L**	**RCD 1260L**		
300…2750	67.00	**RCD 1165L**	**RCD 1265L**		
special meas. range	on request	**RCD-11XXX*** **	**RCD-12XXX*** **	on request	on request

* Nm³/h correspond to a flow rate at 0 °C; 1013 mbar
*** Medium, operating temperature and pressure specified in footnote

Evaluating electronics

Mechanical pointer indication

Indication	Flow direction	Location of ind.
Z = pointer indicat., 270 °	**L** = from left **R** = from right **B** = from bottom	**L** = left **R** = right **T** = top **B** = bottom

ADI-electronics**

Indication	Supply	Output	Contacts
K = bargraph /digital	**0** = 100-240 $V_{AC/DC}$ **3** = 18-30 V_{AC} 10-40 V_{AC}	**0** = without **4** = (0)4-20 mA, 0-10 V	**2** = 2 changeover contacts

Compact electronics**

Indication	Supply	Output/contacts
C = digital	**3** = 24 V_{DC}	**0R** = 2 x Open Collector, PNP **0M** = 2 x Open Collector, NPN **4P** = 4-20 mA, 1 x Open Coll. PNP **4N** = 4-20 mA; 1 x Open Coll. NPN

** Please specify flow direction in the order (expect from top to bottom)
Please specify the operating conditions in the order

12. Dimensions

RCD...Z with mechanical display

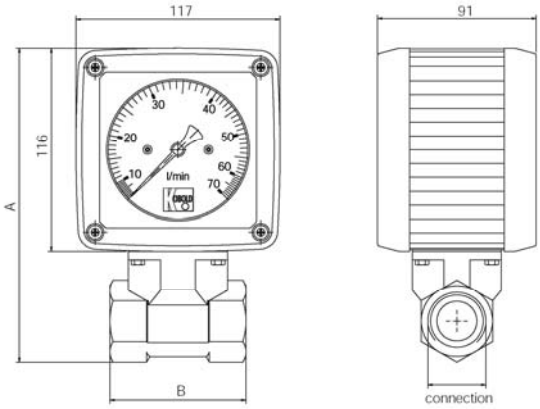

Screw thread	A	B	C	D	Weight (approx.)
G 1/2	191	78	hex 27	143	ca. 2,0 kg
G 3/4	191	78	hex 41	143	ca. 2,3 kg
G1	191	78	hex 41	143	ca. 2,2 kg
G 1 1/2	206	78	hex 55	158	ca. 2,6 kg
G 2	204	81	hex 70	156	ca. 2,8 kg
G3	221	106	hex 100	173	ca. 5,1 kg

RCD...C with compact electronics

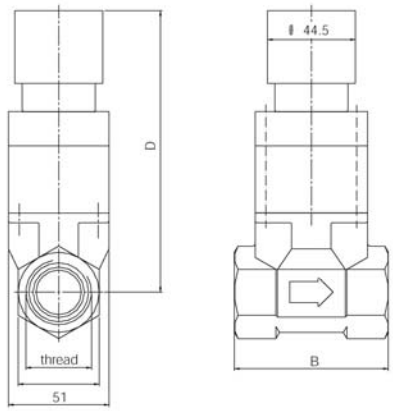

Screw thread	A	B	C	D	Weight (approx.)
G 1/2	191	78	hex 27	143	ca. 2,1 kg
G 3/4	191	78	hex 41	143	ca. 2,4 kg
G1	191	78	hex 41	143	ca. 2,2 kg
G 1 1/2	206	78	hex 55	158	ca. 2,6 kg
G 2	204	81	hex 70	156	ca. 2,9 kg
G3	221	106	hex 100	173	ca. 5,2 kg

RCD...K with ADI electronic
(same dimensions for RCD...D and RCD...K)

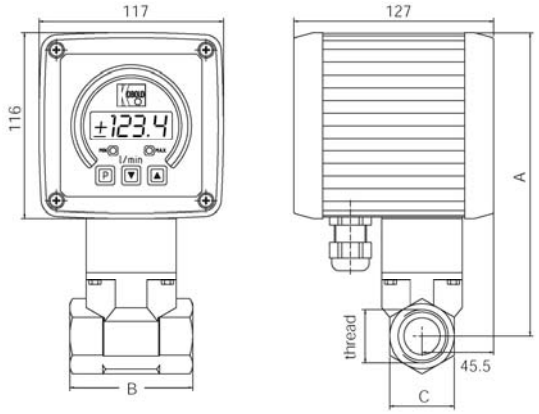

Screw thread	A	B	C	D	Weight (approx.)
G 1/2	191	78	hex 27	143	ca. 3,4 kg
G 3/4	191	78	hex 41	143	ca. 3,7 kg
G1	191	78	hex 41	143	ca. 3,6 kg
G 1 1/2	206	78	hex 55	158	ca. 3,9 kg
G 2	204	81	hex 70	156	ca. 4,2 kg
G3	221	106	hex 100	173	ca. 6,5 kg

13. Disposal

Note!

- Avoid environmental damage caused by media-contaminated parts
- Dispose of the device and packaging in an environmentally friendly manner
- Comply with applicable national and international disposal regulations and environmental regulations.

Batteries

Batteries containing pollutants are marked with a sign consisting of a crossed-out garbage can and the chemical symbol (Cd, Hg, Li or Pb) of the heavy metal that is decisive for the classification as containing pollutants:

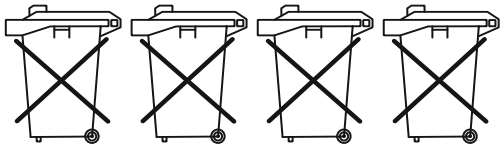

Cd[1] Hg[2] Pb[3] Li[4]

1. „Cd" stands for cadmium
2. „Hg" stands for mercury
3. „Pb" stands for lead
4. „Li" stands for lithium

Electrical and electronic equipment

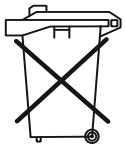

14. EU Declaration of Conformance

We, KOBOLD-Messring GmbH, Hofheim-Ts, Germany, declare under our sole responsibility that the product:

Differential Pressure Flow Meter / Monitor model: RCD -...

to which this declaration relates is in conformity with the standards noted below:

EN 61000-6-4:2011
Electromagnetic compatibility (EMC) - Part 6-4: Generic standards - Emission standard for industrial environments

EN 61000-6-2:2005
Electromagnetic compatibility (EMC) - Part 6-2: Generic standards - Immunity for industrial environments

EN 61010-1:2010
Safety requirements for electrical equipment for measurement, control and laboratory use - Part 1: General requirements

EN 60529:2014
Degrees of protection provided by enclosures (IP Code)

EN IEC 63000:2018 Technical documentation for the assessment of electrical and electronic products with respect to the restriction of hazardous substances

in accordance with the general requirements of the guidelines

2014/35/EU	**Low Voltage Directive**
2014/30/EU	**EMC Directive**
2011/65/EU	**RoHS** (category 9)
2015/863/EU	Delegated Directive (RoHS III)

2014/68/EU PED

	Pipe	
	Diagram 7 group 1 no dangerous fluids	Diagram 6 group 2 dangerous fluids
RCD-..05 - RCD..30	Art. 4, § 3	Art. 4, § 3
RCD-1135, RCD-1140	Art. 4, § 3	Cat. I
RCD-1235, RCD-1240	Cat. I	Cat. II
RCD-1145, RCD-1150	Art. 4, § 3	Cat. I
RCD-1245, RCD-1250	Cat. I	Cat. II
RCD-1155, RCD-1160, RCD-1165	Cat. I	not deliverable
RCD-1260, RCD-1265	Cat. I	Cat. II

- Module D, marking CE0575
- Notified body: DNV AS
- Certificate No. PEDD000000R

Hofheim, 15 March 2023

H. Volz
General Manager

M. Wenzel
Proxy Holder

15. UK Declaration of Conformity

We, KOBOLD Messring GmbH, Hofheim-Ts, Germany, declare under our sole responsibility that the product:

Differential Pressure Flow Meter / Monitor model: RCD -...

to which this declaration relates is in conformity with the standards noted below:

BS EN 61000-6-4:2007+A1:2011
Electromagnetic compatibility (EMC). Generic standards. Emission standard for industrial environments

BS EN 61000-6-2:2005
Electromagnetic compatibility (EMC). Generic standards. Immunity for industrial environments

BS EN 61010-1:2010
Safety requirements for electrical equipment for measurement, control, and laboratory use. General requirements

BS EN 60529:1992+A2:2013
Degrees of protection provided by enclosures (IP-Code)

BS EN IEC 63000:2018
Technical documentation for the assessment of electrical and electronic products with respect to the restriction of hazardous substances.

Also, the following UK guidelines are fulfilled:

S.I. 2016/1091	**Electromagnetic Compatibility Regulations 2016**
S.I. 2016/1101	**Electrical Equipment (Safety) Regulations 2016**
S.I. 2012/3032	The Restriction of the Use of Certain Hazardous Substances in Electrical and Electronic Equipment Regulations 2012

S.I. 2016/1105 The Pressure Equipment (Safety) Regulations 2016

	Pipe	
	Diagram 7 group 1 no dangerous fluids	Diagram 6 group 2 dangerous fluids
RCD-..05 - RCD..30	Art. 4, § 3	Art. 4, § 3
RCD-1135, RCD-1140	Art. 4, § 3	Cat. I
RCD-1235, RCD-1240	Cat. I	Cat. II
RCD-1145, RCD-1150	Art. 4, § 3	Cat. I
RCD-1245, RCD-1250	Cat. I	Cat. II
RCD-1155, RCD-1160, RCD-1165	Cat. I	not deliverable
RCD-1260, RCD-1265	Cat. I	Cat. II

- Module D, marking CE0575
- Notified body: DNV AS
- Certificate No. PEDD000000R

Hofheim, 15 March 2023

H. Volz
General Manager

M. Wenzel
Proxy Holder