M-Zert
Zertifiziertes QM-System
DIN EN ISO 9001
Zertifikat-Nr. 01017

Inductive Conductivity/ Concentration and Temperature Transmitter

KOBOLD

measuring • monitoring • analysing

LCI

remote version LCI-S ... M

compact version LCI-K ... K

- Compact or separate version
- Activation of up to four measuring ranges (up to 2000 mS/cm)
- Concentration measurement of a freely definable curve
- Graphics LC-display
- Fast-response temperature sensor for temperature compensation
- Different operator languages
- User-friendly programming and plant documentation by using the setup program
- p_{max}: 10 bar; t_{max}: 120 °C

A1

KOBOLD companies worldwide:
AUSTRALIA, AUSTRIA, BELGIUM, BULGARIA, CANADA, CHINA, CZECHIA, FRANCE, GERMANY, GREAT BRITAIN, HUNGARY, INDIA, INDONESIA, ITALY, MALAYSIA, MEXICO, NETHERLANDS, PERU, POLAND, REPUBLIC OF KOREA, RUSSIA, SPAIN, SWITZERLAND, THAILAND, TUNISIA, TURKEY, USA, VIETNAM

KOBOLD Messring GmbH
Nordring 22-24
D-65719 Hofheim/Ts.
Head Office:
+49(0)6192 299-0
+49(0)6192 23398
info.de@kobold.com
www.kobold.com

Description

The device LCI is used for the measurement and control of the conductivity and respectively for concentrations of liquid media. The integrated temperature measurement makes exact and fast temperature compensation (linear and non-linear) possible, which is particularly important for the measurement of the conductivity. Additional functions such as the combined switching of the measurement range and temperature coefficient make possible the optimum use in case of CIP-processes.
Two integrated switching outputs can be freely programmed for limit value monitoring or conductivity/concentration and/ or temperature. In addition, alarm and control tasks (desalination) can be assigned.
Operation is either via a membrane keyboard and a plain text graphical display (user language can be changed) or via a comfortable PC-setup programme. By simply turning the housing cover, reading the display is possible both in case of installation in vertical or horizontal pipes. By means of the setup program, the device configuration data can also be saved and printed for plant documentation purposes.
The housing is specially produced out of stainless steel for use in the foodstuffs industry. The LCI can be supplied as a compact device (transmitter and measuring cell in one device) or as a remote version (transmitter and measuring cell connected by cables). The remote version is particularly suitable for plants with intense vibrations and/or intense temperature radiation at the measurement location or for installation in inaccessible places.

Applications

It is particularly recommended for use in media where severe deposits of dirt, oil, grease or gypsum/lime precipitates are to be expected.

- Food, beverage and pharmaceutical industries
- Product separation in the beverage industry, breweries and dairies
- Bottle cleaning plants
- Concentration control in electroplating and chemical processing plants
- CIP-systems
- Water and wastewater engineering
- Dosing of chemicals
- Leakage indication in heating and cooling plant and so on

Functional Description

The inductive measurement method permits largely maintenance-free acquisition of the specific conductivity, even in the toughest media conditions. As opposed to the conductive measurement method, problems such as electrode decomposition and polarization do not occur.

Conductivity is measured by using an inductive probe. A sinusoidal a.c. voltage feeds the transmitting coil. Depending on the conductivity of the liquid to be measured, a current is induced in the receiver coil. This current is proportional to the conductivity of the medium.

Measuring Cell

The measuring cell consists of a hermetically sealed body inside which the two measurement coils are arranged. A bore in the measuring cell enables the medium to flow through. The measurement principle entails an inevitable electrical isolation between the sample medium and the signal output. The measuring cell is largely unaffected by temperature and pressure variations.

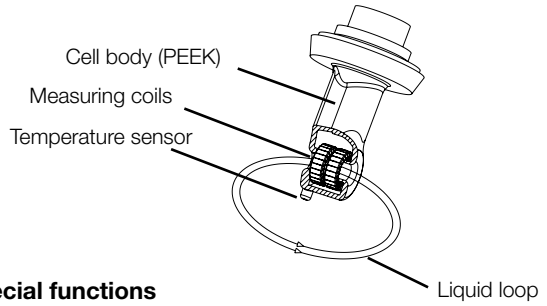

Special functions

- The **learning function** for the temperature coefficient enables exact measurement of media with a non-linear characteristic. During a temperature change, the instrument “learns” the temperature coefficient of the present medium and stores the profile. The stored values then enable the correct indication of the temperature compensated conductivity.
- **Individual characteristic** for concentration indication. An individual characteristic with 20 interpolation points can be entered through the setup program. This function can be used to generate special characteristics for specific media (e.g. special detergents). This results in correct measurements that contribute to assuring the quality and saving costs.
- For **dilution control** various processes that find their application in wet cooling towers are stored as sequence control (biocide dosing and subsequent inhibiting of dilution). Detailed information can be found in the operating manual.
- The **calibration timer** draws your attention to a calibration schedule. This function is activated by entering a number of days, after which recalibration has to be carried out (plant or operator requirement).

Graphic-Display

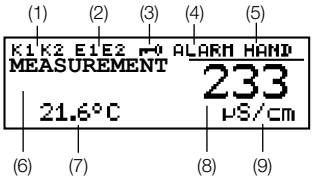

(1) Switching output 1 or 2 is active
(2) Binary input 1 or 2 is operated
(3) Keypad is inhibited
(4) Alarm has been activated
(5) Instrument is in manual mode
(6) Instrument status
(7) Temperature of medium
(8) Conductivity measurement
(9) Unit of conductivity measurement

1/03 - 2023

Technical Details

Sensor

Material:	PEEK (polyetheretherketone), PVDF (polyvinylidenefluoride)
Pressure:	max. 10 bar
Medium temperature:	-10…+120 °C (briefly +140 °C)

A/D-Converter

Resolution:	15 Bit
Sampling time:	500 ms = 2 measurements/s
Power supply:	19…31 V_{DC} (nominal 24 V_{DC}), protection
Ripple:	<5%
Power drawn with display:	≤3 W
Breaking capacity of the semiconductor relay:	U < 50 $V_{AC/DC}$, I ≤200 mA
Electrical connection:	threaded plug terminals 2.5 mm^2 or M12-plug/sockets
Display:	graphic-LCD with background lighting; contrast adjustable
Dimensions:	62 x 23 mm
Permissible ambient temp. (transmitter):	+5 … +50 °C, max. 93% rel. atmospheric humidity, without thawing
Permissible storage temp. (transmitter):	-10 … +75 °C max. 93% rel. atmospheric humidity, without thawing
System protection (transmitter):	IP 67
Housing:	stainless steel 1.4305
Weight:	approx. 0.3 … 2.4 kg

Conductivity/Concentration Transmitter

Concentration measurement (implemented in the device software)

– NaOH (caustic soda):	0 … 15% or 25 … 50% by weight (0 … 90 °C)
– HNO3 (nitric acid):	0 … 25% or 36 … 82% by weight (0 … 80 °C)

– customer-specific concentration curve, freely programmable through the setup programme (see “special functions”)

Calibration timer:	adjustable: 0 … 999 days (0 = off)
Output signal for conductivity and concentration:	0 … 10 V or 10 … 0 V 2 … 10 V or 10 … 2 V 0 … 20 mA or 20 … 0 mA 4 … 20 mA or 20 … 4 mA freely scalable
Load:	≤500 Ω for current output 2 kΩ for voltage output
Ambient temp. error:	≤0.1%/K
Analogue outp. for “Alarm”:	low (0 mA/0 V/ 3,4 mA /1,4 V) or high (22.0 mA /0.7 V) or a value with a fixed setting
Measuring ranges:	four ranges selectable and switchable

Measurement ranges transmitter	Accuracy [of f.s.]
0…500 µS/cm	≤0.5%
0…1000 µS/cm	
0…2000 µS/cm	
0…5000 µS/cm	
0…10 mS/cm	
0…20 mS/cm	
0…50 mS/cm	
0…100 mS/cm	
0…200 mS/cm	
0…500 mS/cm	
0…1000 mS/cm	
0…2000 mS/cm (not temperature-compensated)	

Measurement ranges sensor	Accuracy [of f.s.]
0…500 µS/cm	≤1%
0…1000 µS/cm	
0…2000 µS/cm	≤0.5%
0…5000 µS/cm	
0…10 mS/cm	
0…20 mS/cm	
0…50 mS/cm	
0…100 mS/cm	
0…200 mS/cm	
0…500 mS/cm	
0…1000 mS/cm	≤1%
0…2000 mS/cm (not temperature-compensated)	

Note: *Overall accuracy = accuracy of the transmitter + accuracy of the sensor*

Technical Details (continuation)

Temperature transmitter

Temperature acquisition:	manually -20.0 ... +25.0 ... +150 °C or °F or automatically
Temperature range:	-20...+150 °C or °F
Characteristic:	linear
Accuracy:	≤0.5% of range
Ambient temperature error:	≤0.1%/K
Output signal for temperature:	0...10 V or 10...0 V 2...10 V or 10...2 V 0...20 mA or 20...0 mA 4...20 mA or 20...4 mA the output signal is freely scalable within the range -20...+200 °C
Load:	≤500 Ω for current output ≥2 kΩ voltage output
Analogue output for »Alarm«:	low (0 mA / 0 V / 3.4 mA / 1.4 V) or a value with a fixed setting or high (22.0 mA / 10.7 V)

Temperature compensation

Reference temperature:	15...30°C adjustable
Temperature coefficient:	0.0...5.5%/K adjustable
Compensation range:	-20...+150 °C
Function:	– linear or – natural water (EN 27 888) or – non-linear (learning function, see special functions)

Dimensions [mm]

Compact version, electrical connection »K« (Standard)

Operating unit of transmitter

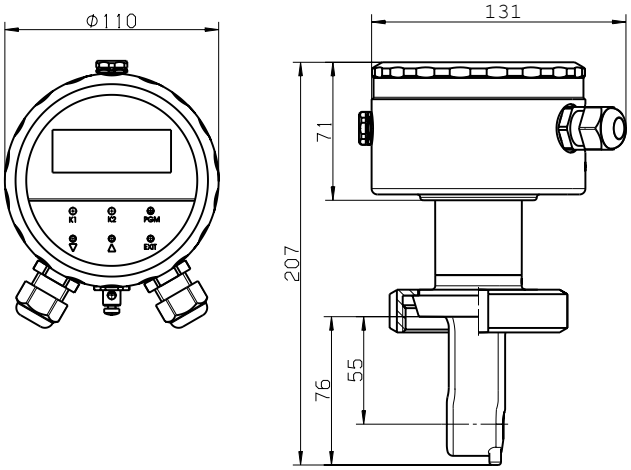

Remote version, electrical connection »M«

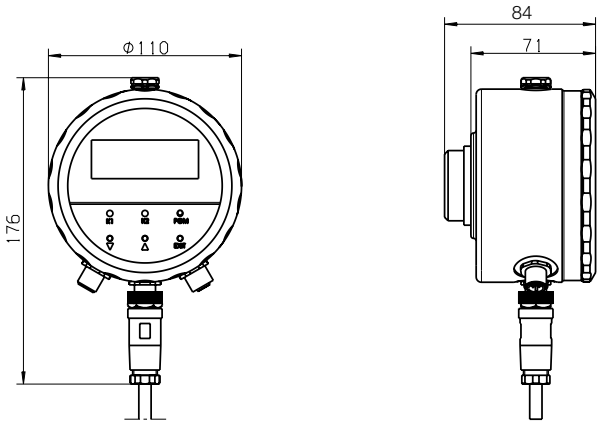

Process connections

Screw-in thread G 1½ male, G 2 male

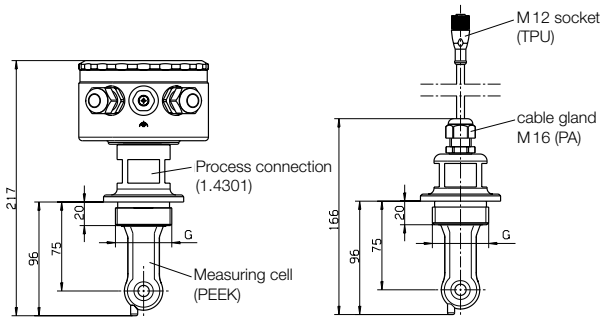

Compact **Remote**

1/03 - 2023

Screwed pipe fitting DIN 11851

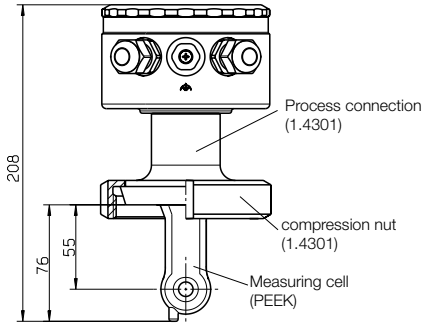

Compact

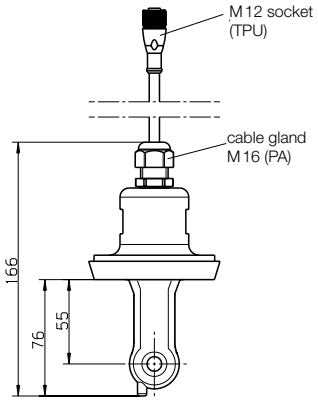

Remote

Tri-Clamp®

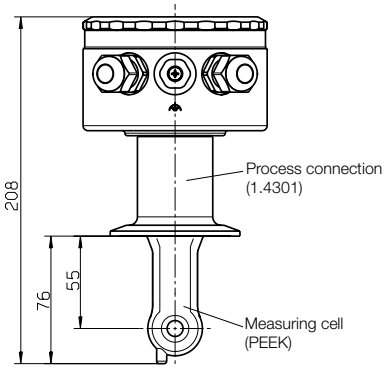

Compact

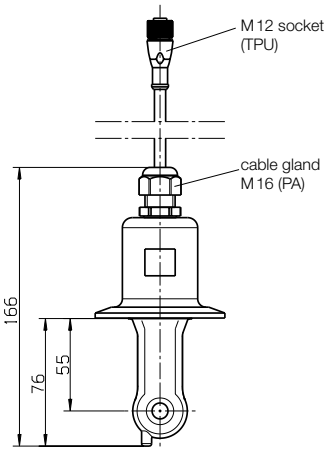

Remote

VARIVENT®

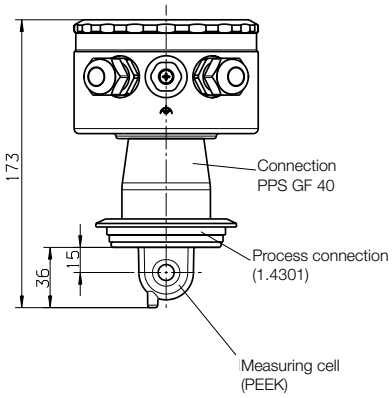

Compact

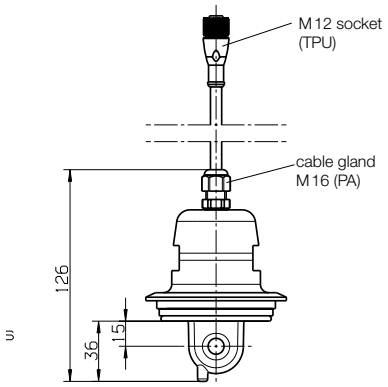

Remote

Accessories

Wall mounting (standard for remote version)

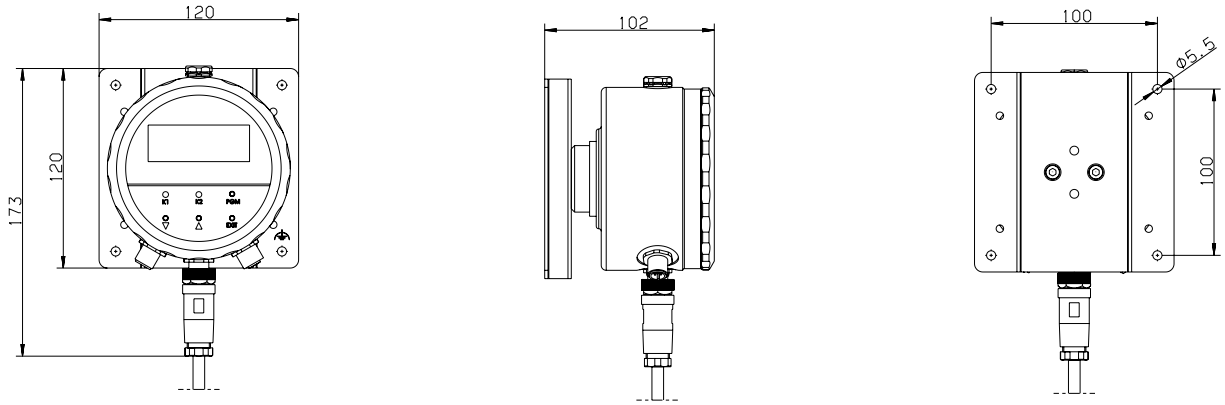

Electrical connection »K«

Compact version

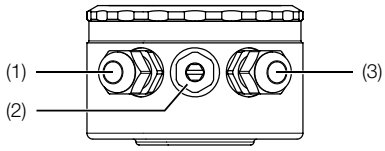

(1) Power supply and actual value output (conductivity/concentration and temperature) M16 cable gland (PA)

(2) Blanking plug

(3) Binary input M16 cable gland (PA)

Remote version

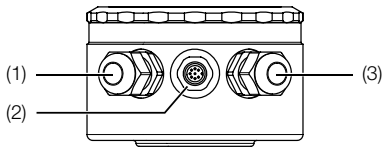

(1) Power supply and actual value output (conductivity/concentration and temperature) M16 cable gland (PA)

(2) Separate sensor M12 flush-type connector

(3) Binary input and switching outputs M16 cable gland (PA)

Electrical connection »M«

Compact version

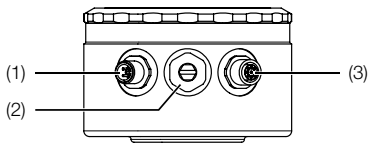

(1) **Connector I**
Power supply and actual value output for conductivity/concentration
M12 flush-type connector, 5-pin

(2) Blanking plug

(3) **Connector II**
Actual value output for temperature, and binary input and switching outputs
M12 flush-type connector, 8-pin

Remote version

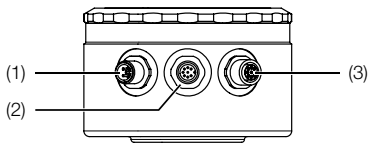

(1) **Connector I**
Power supply and actual value output for conductivity/concentration
M12 flush-type connector, 5-pin

(2) **Connector III**
Inductive conductivity sensor
M12 flush-type connector, 8-pin

(3) **Connector II**
Actual value output for temperature, and binary input and switching outputs
M12 flush-type connector, 8-pin

1/03 - 2023

Order Details (Example: **LCI-K G40 M PK**)

Model	Version	Process connection	Electrical connection	Material measuring cell
LCI-	**K** = compact version **S** = remote version (10 m cable length)[1]	**G40** = stud thread G1½ male **G50** = stud thread G2 male **L50** = screwed pipe connection DN 50 DIN 11851 **L65** = screwed pipe connection DN 65 DIN 11851 **L80** = screwed pipe connection DN 80 DIN 11851 **T65** = Tri-Clamp® 2 ½"	**M** = M 12 plug/socket (mating plug model LCI-GS be ordered separately) **K** = 2x cable glands M16	**PK** = PEEK **PF** = PVDF[3]
		V40 = VARIVENT® DN 40/50[2]		**PK** = PEEK

[1] Special lengths up to 30 m (in 10 m steps) on request
[2] Only possible with PEEK
[3] On request

Accessories

LCI-GS	1 set of plug and socket connection necessary for option M	
LCI-RM	kit for pipe mounting for 30 ...50 mm pipe Ø	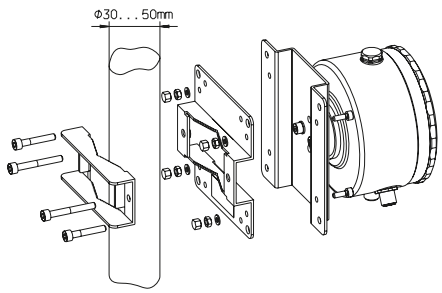
LCI-SOFT	PC setup software for LCI	
LCI-INTER	PC interface cable with USB / TTL converter and two adapters (USB connection cable)	